BuzziShade 220-240V
Product Specification Sheet

This document contains technical information about the BuzziShade pendant and standing

BUZZI SPACE

www.buzzi.space

The BuzziShade combines lit surroundings with acoustic performance.
The design prevents eavesdroppers from hearing your private conversations, and reduces external noise levels to a minimum. The BuzziShade is extremely versatile. The perfect addition to any office, waiting room or restaurant and is ideal for large-scale events. Be creative in colour by adding a layer of fabric to the BuzziFelt shades. The BuzziShade is the culmination of an artistic collaboration between BuzziSpace and the four young Belgian furniture designers of Stal Collectief.

Designed by Stal Collectief

General

Pendant | Standing

BuzziFelt cover
Powder coated metal frame
Fabric power cord
Metal cable set

220 - 240V 50/60Hz Class 1
E27 fitting
Max. 60W

Dry usage

Assembled

Acoustics

Absorption

Content

Configurations	3
Technical components	4
Fabrics	6
Dimensions	8
Acoustics	11

Configurations

BuzziShade Pendant

Medium | Large

BuzziFelt cover with lace
Metal frame in black, white, aluminium or fluorescent orange
Metal cable set in silver or black
Fabric power cord in black, red or fluorescent orange

Height: 42 cm (Medium) or 62 cm (Large)
Diameter: Ø 40 cm - Ø 74 cm (Medium)
Ø 59 cm - Ø 112 cm (Large)

Medium: 4 kg
Large: 8 kg

Lace: Black | White | Fluorescent orange
Optional extra layer Fabric | Terra | Hero inside or outside
Cable set: 200 cm | 500 cm, Silver | Black

If installing on suspended ceiling, verify load capacity prior to installation.

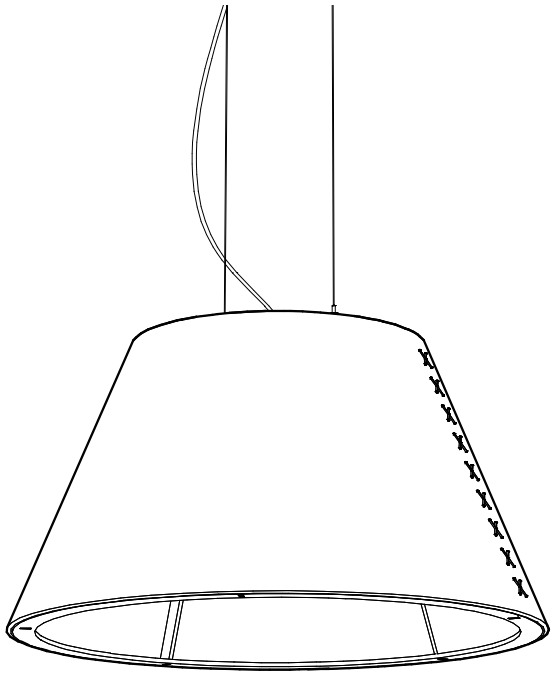

BuzziShade Standing

BuzziFelt cover with lace
Metal frame in black, white or fluorescent orange
Fabric power cord in black, red or fluorescent orange
Black footswitch

Height: 222 cm
Diameter: Ø 69 cm - 144 cm

18 kg

Lace: Black | White | Fluorescent orange

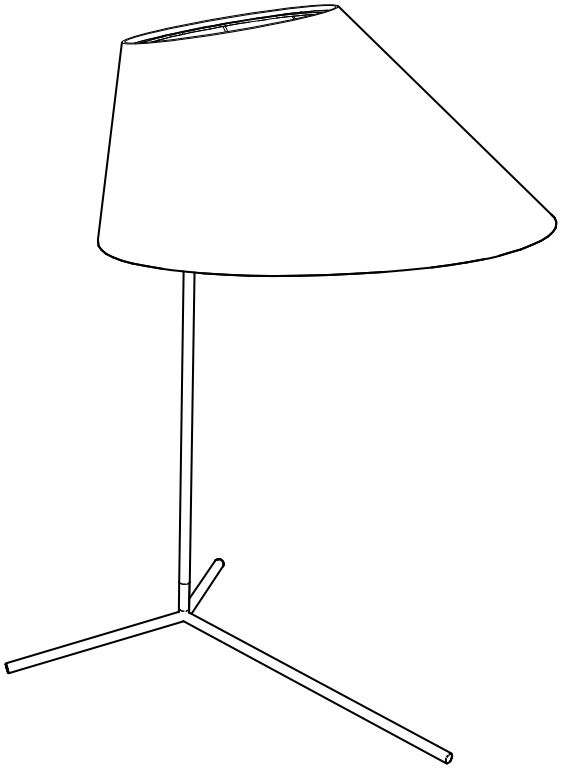

Technical components

BuzziShade Pendant

Ceiling Canopy

Powder coated metal canopy in Black (RAL 9005) or White (RAL 2010)
Including mounting bracket
Height: 2,6 cm
Diameter: 12 cm

Frame

Metal frame available in following colours:

Powder coated white	RAL 9010
Powder coated black	RAL 9005
Fluorescent orange	RAL 2005
Aluminium	not powder coated

Fitting | Power cord

E27 fitting
Fabric power cord

Colour frame	Colour fitting	Colour fabric power cord	Colour Ceiling Canopy
Black	Black	Black	Black
White	White	Red	White
Fluorescent orange	Black	Fluorescent orange	Black
Aluminium	Black	Black	Black

BuzziShade Standing

Frame

Metal frame available in following colours:
Powder coated white | RAL 9010
Powder coated black | RAL 9005
Fluorescent orange | RAL 2005

Fitting | Power cord

Black bakelite fitting E27 fitting
Fabric power cord

Colour frame	Colour fitting	Colour fabric power cord
Black	Black	Black
White	White	Red
Fluorescent orange	Black	Fluorescent orange

Power cord has a length of 250 cm finished with a plug and footswitch.

Power switch

Black footswitch

Fabrics

Felt

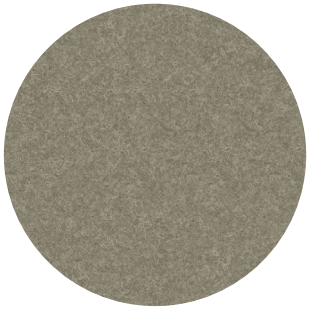

Composition 100% Recycled P.E.T. Felt, latex backing
Weight 1.000 g/m2 | 29.49 oz/yd2
Abrasion resistance >7.000 Martindale
Flammability EU: EN 13501.1 + A1/2009 Class B-s1,d0
USA: ASTM E84 Class A certified
Fastness to light USA 5

Fabric

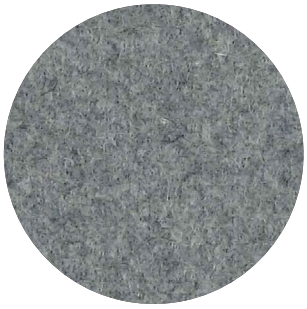

Category A
Composition 70% Recycled Wool, 25% Recycled Polyacryl,
5% Recycled Other Fabrics
Weight 405 g/m² | 11.94 oz/yd²
Abrasion resistance 40.000 Martindale, 50,000 Wyzenbeek
Flammability EU: EN 1021.1/2006 | BS EN 1021.1/2006 (cigarette).
EN 1021.2/2006 | BS EN 1021.2/2006 (match)
USA: CAL TB 117 | ASTM E84 CLASS A
Fastness to light EU 4 | USA 4
Fastness to rubbing EU: Wet 3-4 | Dry 4-5
Fastness to crocking USA: Wet 5 | Dry 5

Terra

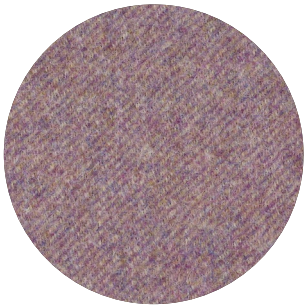

Category B
Composition 100% Pure New Wool
Weight 370 g/m² | 10.91 oz/yd²
Abrasion resistance 40.000 Martindale, 25,000 Wyzenbeek
Flammability EU: BS5852 CRIB 5 | BS5867 PART 2 : 2008 : TYPE B
EN 1021.2/2006 | USA: CAL TB 117
Fastness to light EU 5 | USA 5
Fastness to rubbing EU: Wet 4 | Dry 4
Fastness to crocking USA: Wet 4 | Dry 4

Hero

kvadrat

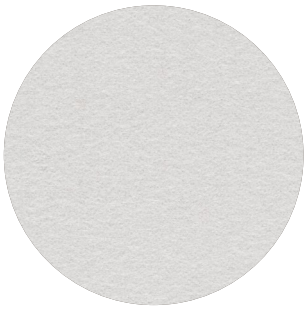

Category C
Composition 96% new wool, 4% nylon
Weight 580 g/lin.m
Abrasion resistance 45.000 Martindale rubs, EN ISO 12947
Flammability EN 1021-1/2 | DIN 4102 B2 | NF D 60 013
UNI 9175 1IM | US Cal. Bull. 117-2013 | NFPA 260
IMO A.652 (16)
Fastness to light Note 5-6, ISO 105-B02
Fastness to rubbing (ISO) dry 4-5, wet 4-5
Pilling Note 3-4, EN ISO 12945

Lace

Lace black | white | fluorescent orange

Dimensions

BuzziShade Pendant Medium

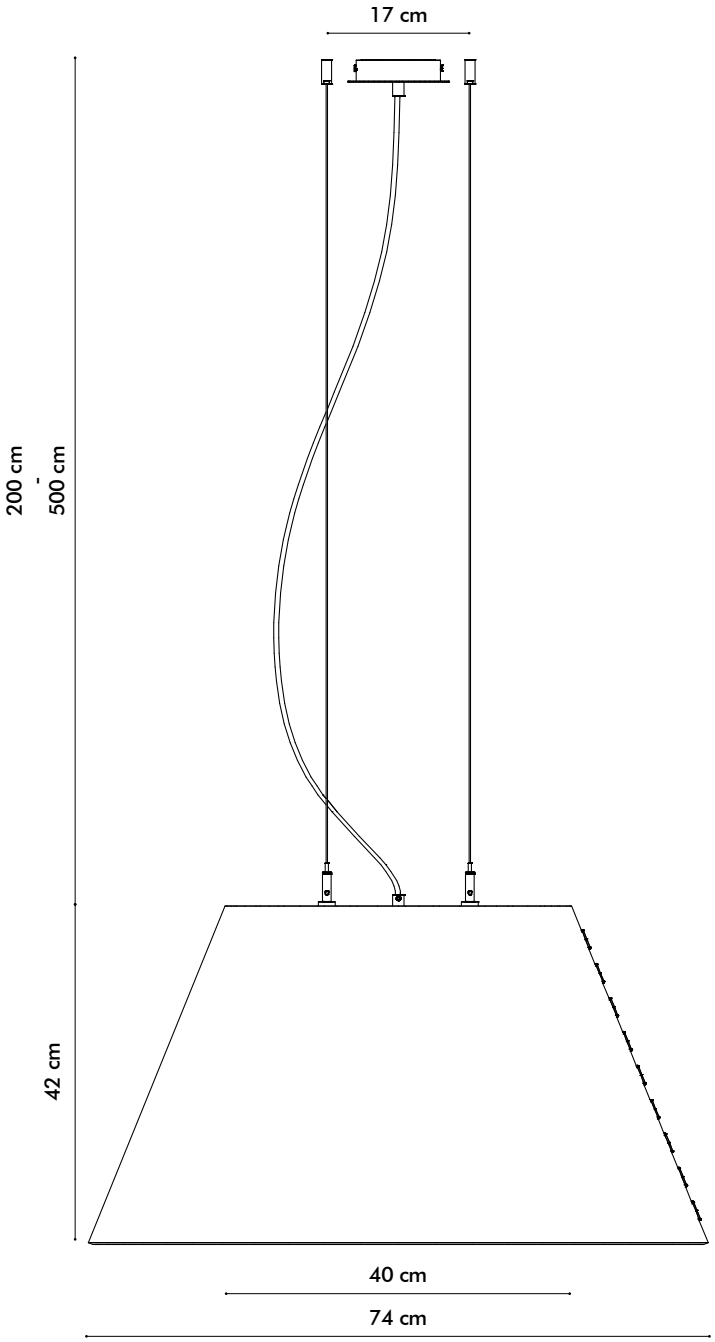

BuzziShade Pendant Large

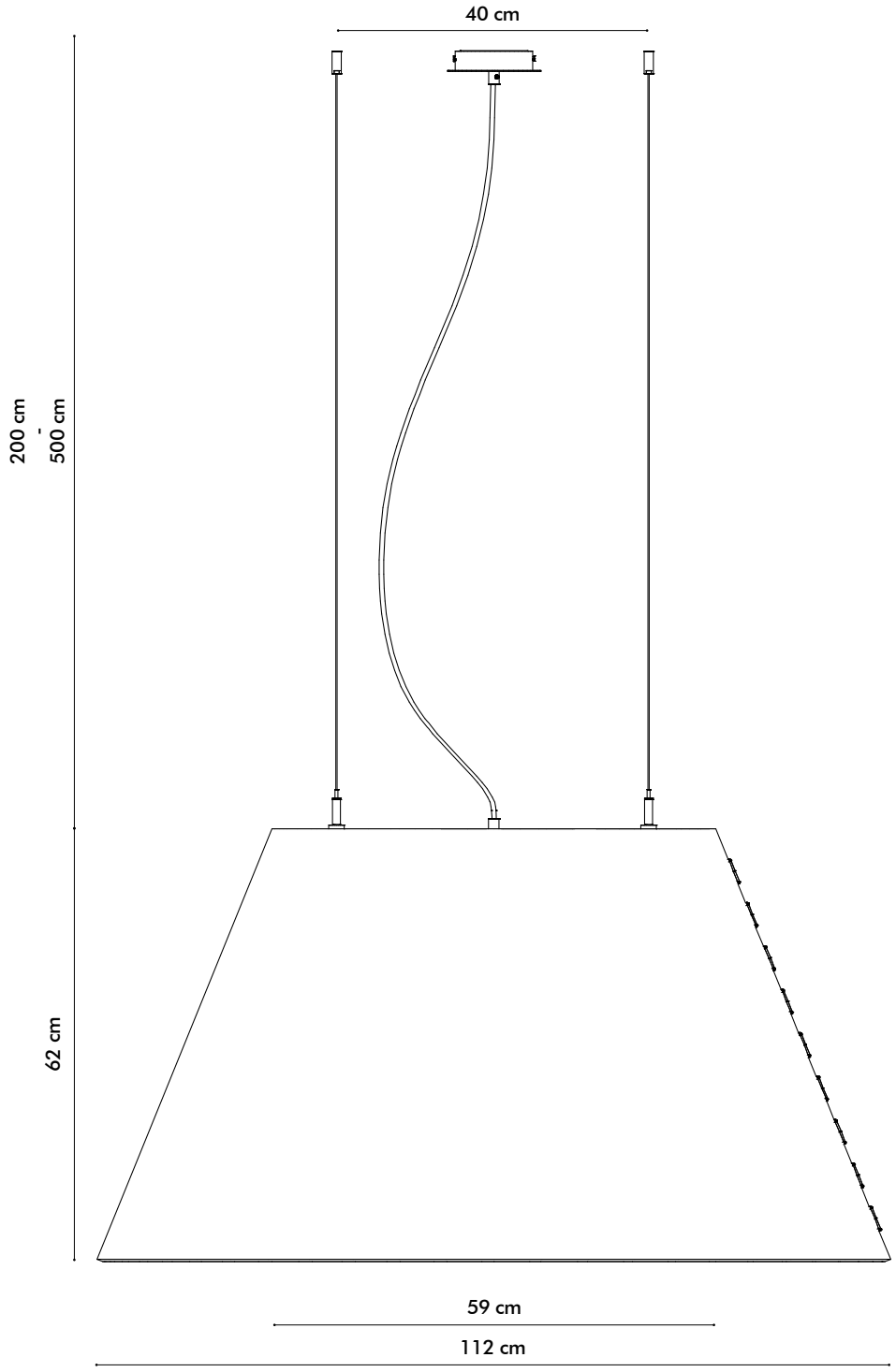

BuzziShade Standing

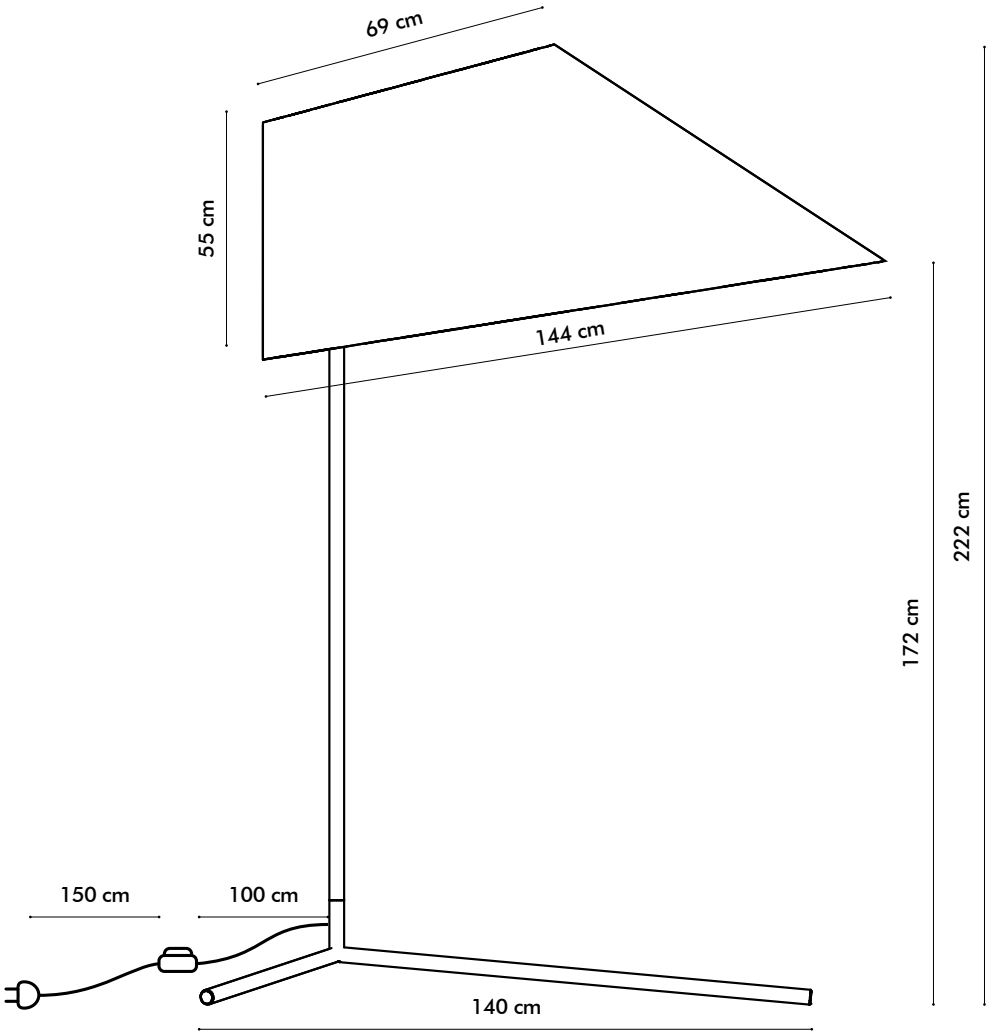

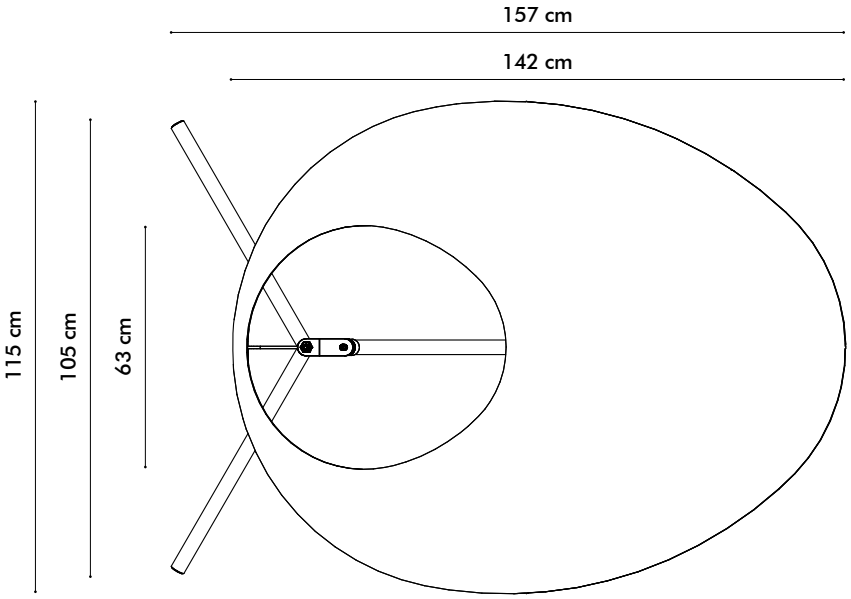

Acoustics

BuzziShade

Equivalent sound absorption area in m² per object

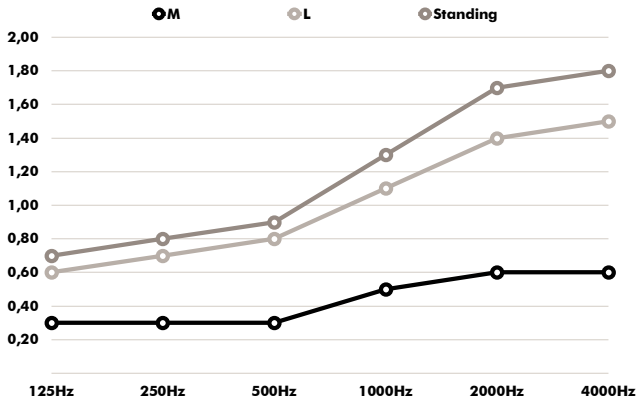

Hz	Shade M Aeq/m²	Shade L Aeq/m²	Shade Standing Aeq/m²
125	0.3	0.6	0.7
250	0.3	0.7	0.8
500	0.3	0.8	0.9
1000	0.5	1.1	1.3
2000	0.6	1.4	1.7
4000	0.6	1.5	1.8

Specifications BuzziSkin

Composition 100% Recycled P.E.T. Felt, selfadhesive backing
Weight 1.000 g/m² | 29.49 oz/yd²
Width 98 cm | 38.58″
Thickness 6,1 mm | 0.24″
Abrasion resistance >7.000 Martindale
Flammability EU: EN 13501.1:2013 Class C-s2,d0
USA: ASTM E84 Class A certified
Fastness to light USA 5
⚠ **Application & Installation Restrictions** see installation manual

Maintenance BuzziSkin

Vacuum clean regularly. Don't wash. Don't remove the BuzziSkin from the product. Treat spillages immediately. Professional dry clean or wipe clean with a pH neutral soap and a damp cloth.

Specifications BuzziFelt

Composition 100% Recycled P.E.T. Felt, latex backing
Weight 1.000 g/m² | 29.49 oz/yd²
Width 170 cm | 66.93″
Thickness 6 mm | 0.236″
Abrasion resistance >7.000 Martindale
Flammability EU: EN 13501.1 + A1/2009 Class B-s1,d0
USA: ASTM E84 Class A certified
Fastness to light USA 5

Maintenance BuzziFelt

Vacuum clean regularly. Don't wash. Don't remove the BuzziFelt from the product. Treat spillages immediately. Professional dry clean or wipe clean with a pH neutral soap and a damp cloth.

BuzziSkin | BuzziFelt

NO BOUNDARIES

samples@buzzi.space | usa.samples@buzzi.space | **www.buzzi.space**

BuzziSkin

SK-Anthracite 68

SK-Jeans 75

SK-StoneGrey 67

SK-LightBlue 60

SK-EcoBrown 58

SK-Mokka 74

SK-OffWhite 63

SK-Curry 61

SK-Red 59

SK-Orange 66

SK-Pink 65

SK-Lime 64

BuzziFelt

FE-LightBlue 60

FE-StoneGrey 67

FE-Jeans 75

FE-Anthracite 68

FE-Curry 61

FE-OffWhite 63

FE-Mokka 74

FE-EcoBrown 58

FE-Lime 64

FE-Pink 65

FE-Orange 66

FE-Red 59

Front

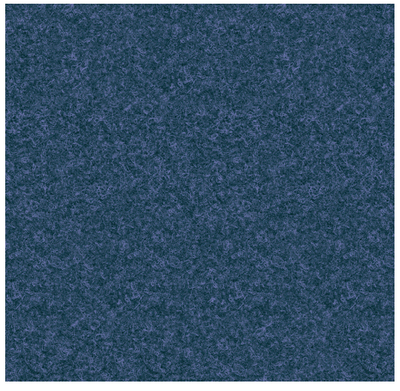

SK-Jeans 75

Back

Back

Front

FE-Mokka 74

Batch to batch variations in shade & density may occur | Application overview & latest update **www.buzzi.space**